1

A x1

B x1

C x1

D x1

E x12

F x4
3.5X9mm

G x3

H x3

I x4
4x12mm

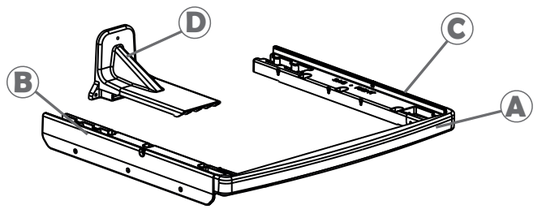

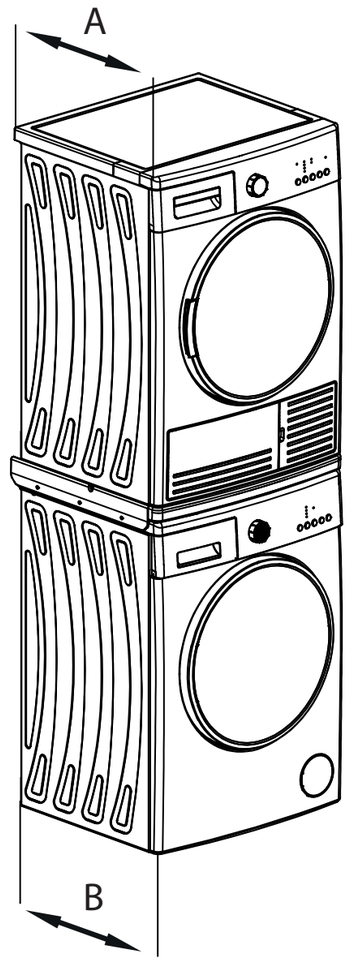

A		B
53 cm	→	50-100 cm
56 cm		50-100 cm
61 cm		53-100 cm
64 cm		56-100 cm

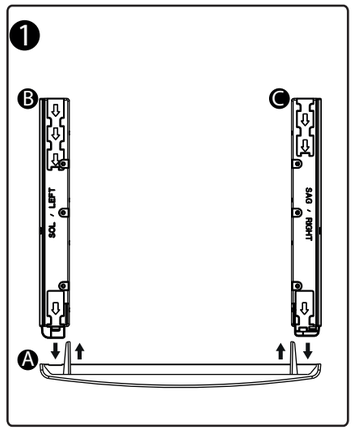

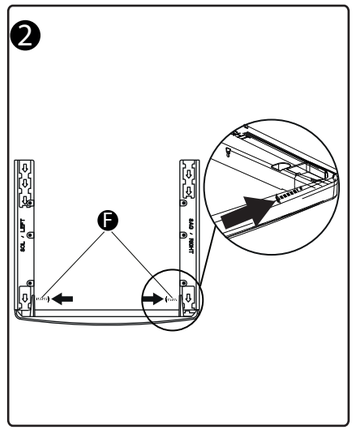

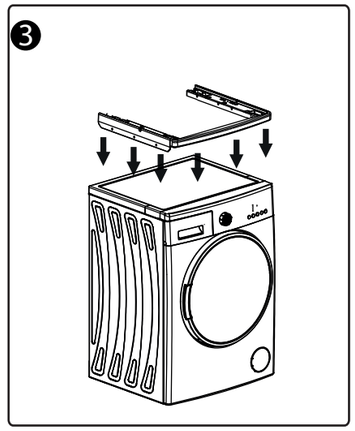

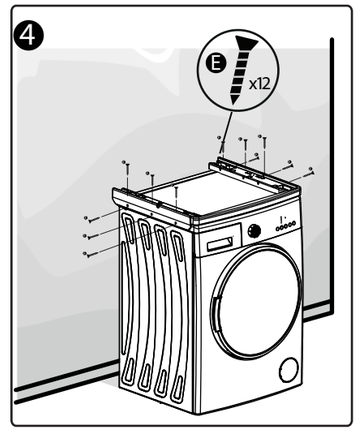

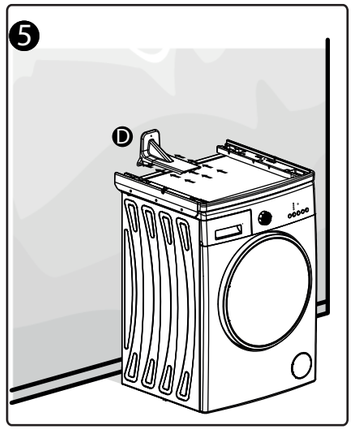

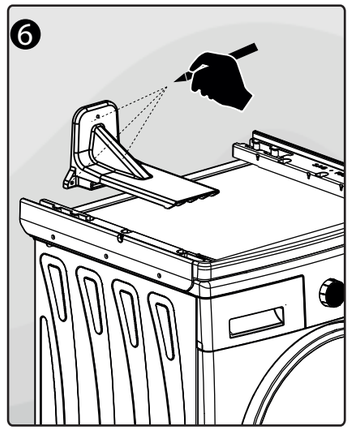

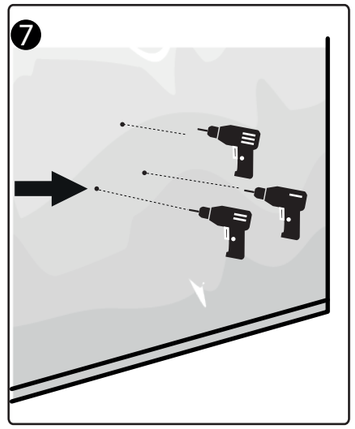

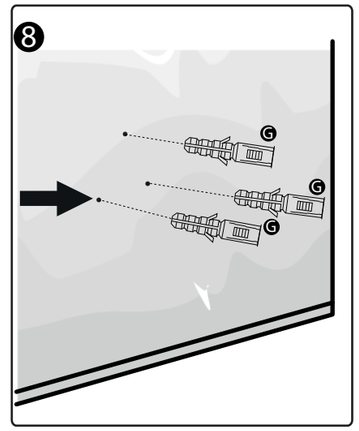

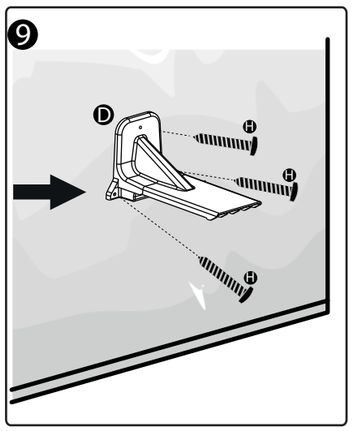

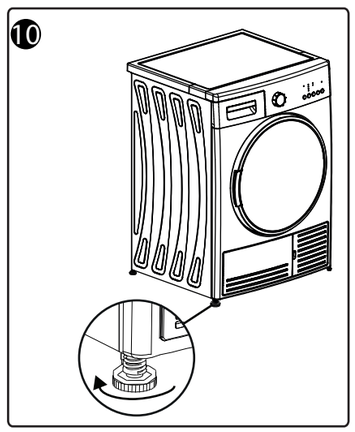

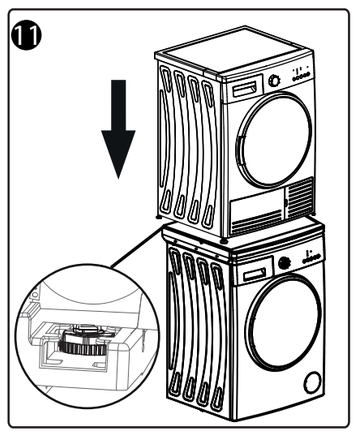

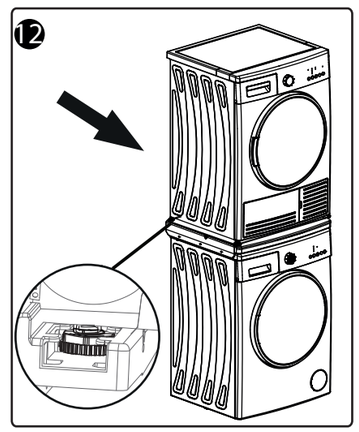

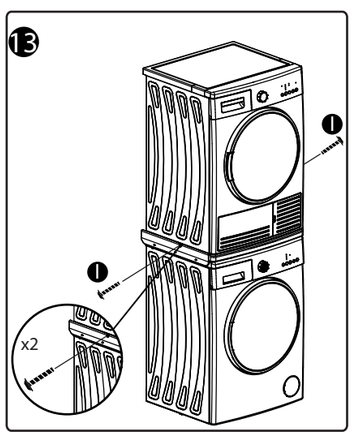

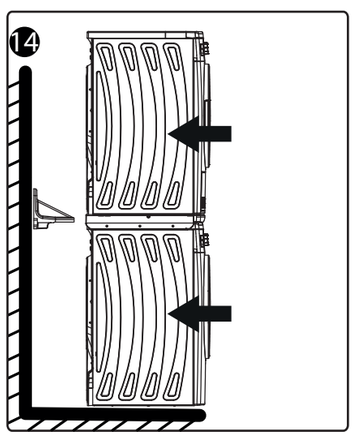

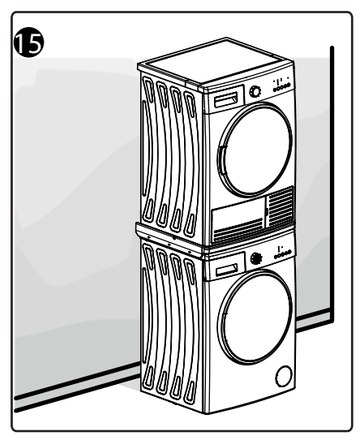

52493821